Miniature Piezo Buzzer Sek-B27C

Suitable for Access Control Door Ajar Alarm

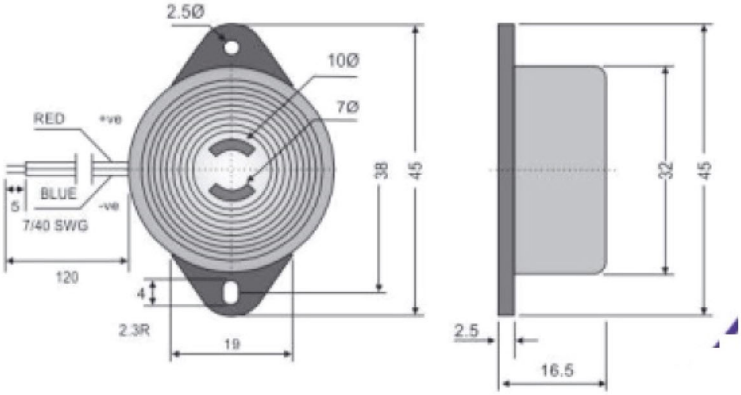

27C

Crystal Buzzers

Model No.	Sound Level Minimum	Oscillation Frequency	Current Consumption	Operating Voltage	Weight gms	Tone	Mounting	Wire / Lead Length	Height (mm)	Ø In (mm)	Pitch (mm)
27C	85 dB	4.0±500 Hz	Maximum 15 mA	1.5 to 27 VDC	9	Continuous	Flange Type	120 mm min. 2 wire	16.5	32	38

Miniature Piezo Buzzer Sek-B27C

Sound Level Minimum:85db
Oscillation Frequency:4KHz±500Hz
Current Consumption: Maximum 15mA
Operating Voltage:1.5 to 27 VDC
Weight gms:10
Tone: Continuous with trigger
Mounting: Flange type
Wire/Lead length:120mm min.3 wire
Height (mm):16.5
Diameter (mm):32
Pitch (mm):38
Operating temperature range:-20 to 50°C
Storage temperature range:-30 to 60°C

Electrical parameter measurements 12VDC & at 30 cm. distance or unless and otherwise specified. Tolerance for dimension ±0.1 mm ,pin height ±1.0mm.